Lucian

Neo 15x15-VB

datasheet

info@lucianlight.com

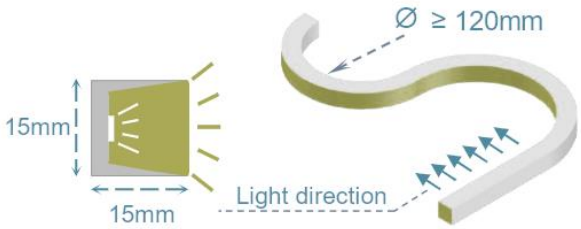

Accessories:

mounting channel 1000mm or 35mm clip with locking spring leaf

Description

Silicone flexible vertical bend LED CRI 90 as standard with UV, Flame and Chlorine resistant. Colour temperature ranges from 2400k - 4000k. Available also in tuneable white, warm dim, RGB & RGBW. Ambient temperature -20°C to 55°C. Remote 24v constant voltage driver.

Luminaire Specification

Width	Height	With Mounting clips	IP rating
15mm	15mm	TBC	IP 67

Lucian

Neo 15x15-VB

datasheet

info@lucianlight.com

Technical

Life maintenance	L70 50.000hrs B10
Output	Static white 5W 260lm, 10W 480lm, 12W 530lm, Hight Efficiency Static White, 12W 800lm, 10W 860lm, 13.5W 1200lm Tuneable white 2x7.5 360/740lm, Warm Dim 14w 580lm, RGB 12W R70-G150-B30 lm/m, RGBW 16W R70-G150-B30-W200 lm/m,
CRI/CCT	2400K-2700K-3000K-3700K-4000K, tuneable white, warm dim & RGB CRI>90
Optics	Opal silicon diffused
Drive current	24V
IP Rating	IP67

Code builder

Model	CCT	Wattage	Power Feed
N15x15-VB	24 2400K	5W So only for static	1 Bottom connector
	27 2700K	10W SO only for static	2 Front connector
	30 3000K	12W SO only for static	3 Side connector
	40 4000K	10W HE only for static	
	TU 2700-5500K tuneable	12W HE only for static	
	WD 3000-1800K Warm did	13.5W HE only for static	
	RGB	12W RGB only for RGB	
	RGBW	16W RGBW only for RGB	
	RGB-DMX 10Pix/m	12W RGB only for RGB	
	RGBW-DMX 10Pix/m	16W RGBW only for RGB	

Cutting increments

CCT	Cutting increment	Max length
2400K 10/12W/m	50mm	15m single feed
2700K 10/12W/m	50mm	15m single feed
3000K 10/12W/m	50mm	15m single feed
4000K 10/12/m	50mm	15m single feed
2400K 5W/m	50mm	20m single feed
2700K 5W/m	50mm	20m single feed
3000K 5W/m	50mm	20m single feed
4000K 5W/m	50mm	20m single feed
2400K 12HE W/m	50mm	15m single feed
2700K 12HE W/m	50mm	15m single feed
3000K 12HE W/m	50mm	15m single feed
4000K 12HE W/m	50mm	15m single feed
2400K 10/13.5 HE W/m	62.5mm	5m single feed
2700K 10/13.5 HE W/m	62.5mm	5m single feed
3000K 10/13.5 HE W/m	62.5mm	5m single feed
4000K 10/13.5 HE W/m	62.5mm	5m single feed
TU 2700-5500K tuneable	62.5mm	5m single feed
WD 3000-1800K Warm did	62.5mm	5m single feed
RGB	100mm	10m single feed
RGBW	100mm	10m single feed
RGB-DMX 10Pix/m	100mm	8m single feed
RGBW-DMX 10Pix/m	100mm	8m single feed

Accessories dimensions:
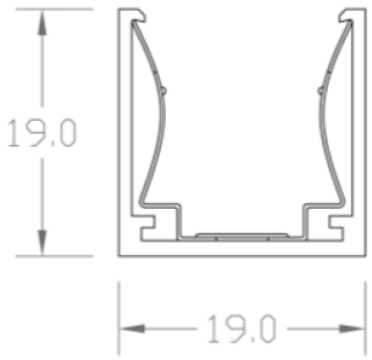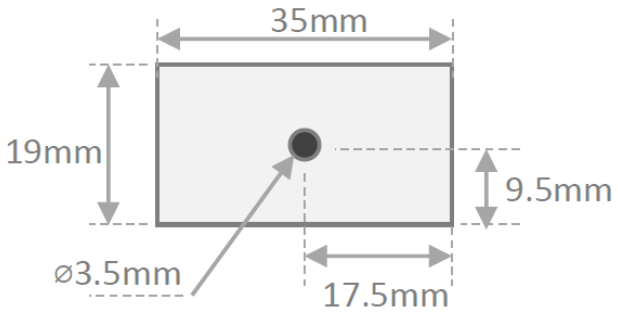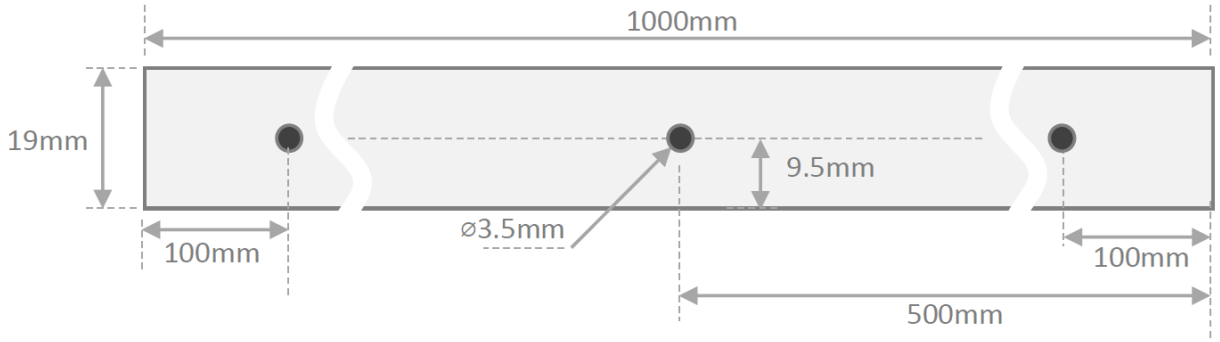
Cross Section