NOCTURNAL LIGHTING

TWIGGY SPOT DOUBLE

Data Sheet

Descrip ion:

Belonging to the **Twiggy family**, the Twiggy Spot Double is a double directional spotlight with single wall bracket mounting supplied with a CREE XLamp XP-G3. Available in various colour temperatures, beam angles and finishes. IP65, Borosilicate Glass Lens, pre-fitted Honey Comb Baffle, pre-fitted 500mm lead.

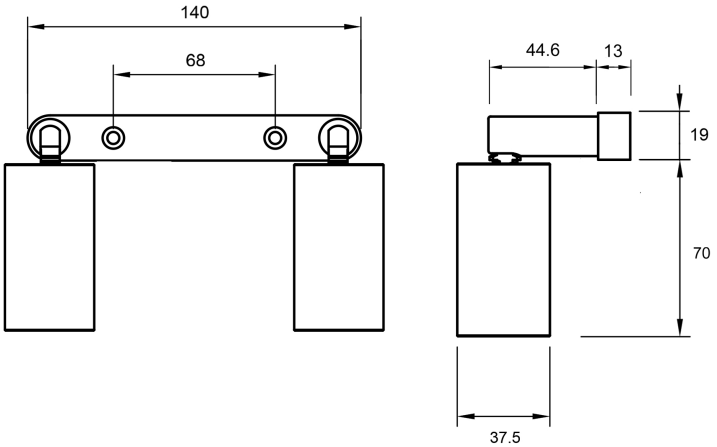

Technical:

LED TYPE	CREE XLAMP XP-G3	CONTROL GEAR	REMOTE
RATED POWER	2x 1W - 2x 3W	DIMMING PROTOCOL	DALI - 0-10V - PHASE DIM - ON/OFF
CRI	80	CABLE LENGTH	500MM STANDARD LENGTH
BEAM ANGLES	NOMINATED IN TABLE BELOW	MOUNTING OPTIONS	SURFACE WALL / CEILING
INPUT POWER / FORWARD VOLTAGE	NOMINATED IN TABLE BELOW / 6V	WEIGHT	ON REQUEST
NOMINAL LUMENS	2x 190lm - 2x 320lm	HARDWARE	GLASS LENS, CABLE
IP RATING	IP65	CONSTRUCTION	MACHINED METAL
COLOUR TEMPERATURE	2700K - 3000K - 4000K	WARRANTY	2 YEARS

Product Generator: example 1609-AB-M-30-F-1W-ON/OFF-N/A

Model	Finish	Beam Angle	CCT	Mountin	Wa age	Dimming	Accessory
NL1609CC	AB Aged Brass	N Narrow 10°	27 2700K	SM Surface Mount	2W / 350mA	DALI	Honeycomb Louvre
	NB Natural Brass	M Medium 21°	30 3000K		6W / 700mA	0-10V	Di user Lens
	PB Black	W Wide 33°	40 4000K			PHASE	
	PW White					ON/OFF	
NL1609CV	AB Aged Brass	N Narrow 10°	27 2700K	SM Surface Mount	2W / 24V DC	DALI	Honeycomb Louvre
	NB Natural Brass	M Medium 21°	30 3000K		6W / 24V DC	0-10V	Di user Lens
	PB Black	W Wide 33°	40 4000K			PHASE	
	PW White					ON/OFF	

NL1609	-		-		-		-		-		-		-	